SEED



HARMONIE

PORTES

RANGE & SYSTEM

Profiles and accessories for the manufacture of joinery and interior furniture.

DESIGN - CONTEMPORARY - UNIQUE

DESIGN & ARCHITECTURAL

DOORS

SWING DOOR «ESSENTIELLE» 4

SWING DOOR «SIGNATURE» 5

PIVOTING DOOR 6

SUSPENDED SLIDIND DOOR 40KG 7

SUSPENDED SLIDING DOOR 70KG 8

SYSTEMS 9-10

- WOOD-COMPATIBLE VARIANT (70KG)
- INDUSTRIAL STYLE SUSPENDED SLIDING DOOR

COMPLEMENTARY SOLUTION 11



HARMONEE

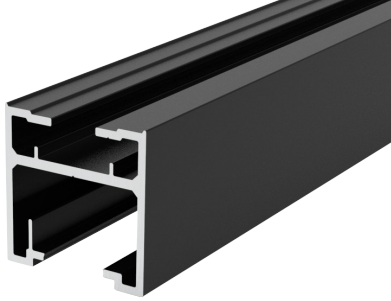

HARMONEE is a range of systems (profiles and accessories) offering **door solutions** (swing, pivoting and suspended sliding) for all your projects.

These systems are designed with **performance** and **mechanical strength in mind**, as we place quality and durability at the heart of our development approach.



MANUFACTURABILITY

Our door solutions have been designed to optimize your fabrication time and simplify assembly and installation, while meeting the demands of **custom-made** projects and **specific requirements.**

CUSTOMISATION

Our doors can be **customized** to perfectly match the architectural style of any interior. Choose from a variety of infill options including glass, wood, or metal for a harmonious and tailored finish.

CREATIVITY

The various applications of our doors and their **flexibility** allow you to create solutions that meet all needs and integration constraints. From functional requirements to aesthetic expectations, ensuring seamless adaptation to every project.

AESTHETICS

Aesthetics and **design** are also key pillars of our range. They are part of SEED's very DNA!

MODULARITY

Starting now, discover our 2 **ready-to-fabricate** swing door KITS! Available in 2 finishes: White lacquered powder coating 9003 and black lacquered powder coating 9005 with a fine texture. They allow you to configure a single swing door, a swing door with a frame extension, or a swing door with a V70 glass panel extension.

SWING DOOR «ESSENTIELLE»

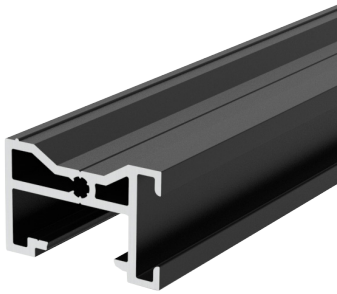

A timeless classic, ideal for easy integration and defining spaces.

This **simple yet comprehensive system** allows the creation of modular **swing doors**, tailored to each project. A sleek and refined solution, particularly well-suited for harmonious pairing with our glass partitions.



Door without frame

Door with frame, horizontal crossbars and optional adhesive flat profiles

Door with lower panel and optional adhesive flat profile

Door with frame

Door with frame and transom

Swing door with side panel



PRODUCT ADVANTAGES :

- **Manufacturing feasibility: straight cut, no machining required.**
- **Pre-machined 66 mm upright for lock integration.**
- **Product aesthetics: 28 mm or 37 mm rail for seamless alignment between the swing door and the glass partition.**
- **6-8 mm infill: glass or decorative panel.**
- **Compatible with the SYMPHONEE interior glass partition range V30 & V70.**

Shades and finishes

The colours collection by SEED

Black lacquered powder coating with a fine texture 9005

White lacquered powder coating with a fine texture 9003

Grey lacquered powder coating with a fine texture 7016

Multi-RAL

Customisation

- Lock options: roller only, roller + latch + half cylinder, reversible latch + deadbolt.
- Handle types: pull handle (black, white or grey finish) or lever handle (black or stainless-steel finish).
- Accessories: cover plate & strike plat.

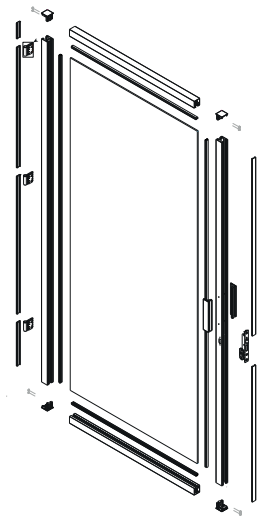

DIMENSIONS

WIDHT
From 630 mm to 930 mm

HEIGHT
Maximum 2200 mm
3 hinges for door up to 2040 mm
4 hinges for door above 2040 mm and up to 2200 mm

Also available as ready-to-assemble KITS

For easy installation, with maximum dimensions of 930 × 2200 mm

KITPORTE20LNOG -Swing door kit with black frame
KITPORTE20LBLG - Swing door kit with white frame
KITPORTE30LNOG - Swing door kit for V70, black finish
KITPORTE30LBLG - Swing door kit for V70, white finish

SWING DOOR «SIGNATURE»



The high-end elegance of a distinctive door, designed to emphasise the identity of every project.

A **high-end, customisable system** that allows you to design swing doors with a distinctive character, offering a wide range of configurations, finishes and accessories to give every project its own unique signature.



Door without frame



Door only, without frame, and with the option of a flat or curved flat profile



Door with frame



Door with a frame without a top rail



Door with frame, horizontal crossbars and optional adhesive flat profiles



Door with lower panel and optional adhesive flat profile



Door with frame and transform



PRODUCT ADVANTAGES :

- A bold design with a 53 mm profile that gives the door a more striking presence.
- Premium locking system: magnetic lock or concealed magnetic closure.
- 6-8 mm infill, glazing or decorative panel.
- Extensive customisation — numerous configurations, finishes and options.
- Compatible with the V40 interior glass partition system.

Shades and finishes

La collection couleurs by SEED

Black lacquered powder coating with a fine texture 9005

White lacquered powder coating with a fine texture 9003

Multi-RAL

Customisation

- Recessed magnetic closure or magnetic lock,
- Handle type: pull handle (white, black, grey or Multi-RAL) or lock without a base plate (white, black or Multi-RAL),
- Accessories: recessed hinge or reversible hinge, curved plates.

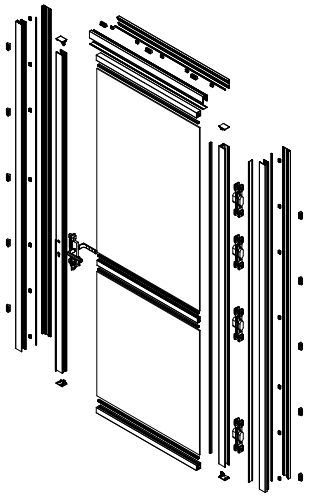

DIMENSIONS
WIDHT Maximum 930mm
HEIGHT Full-height



PIVOTING DOOR

Perfect for separating spaces with fluidity and elegance

Designed to blend seamlessly into the most refined interiors, our **pivoting door** discreetly recedes to enhance the surrounding space. Free from any visible framing, it creates a smooth and graceful transition between rooms. Its **pivot-opening system** combines minimalist aesthetics with ease of installation.



PRODUCT ADVANTAGES :

- **Customisation: made possible with crossbars and various stick-on flat bars (25, 30, 44 mm).**
- **Pre-machined profiles: The 40 mm top and bottom crossbars are available pre-machined, helping to reduce manufacturing time.**
- **Modularity: Pivot can be centred or offset (with an adjustment range of 170 mm).**
- **Infill: 6-8 mm glass or decorative panel.**

Shades and finishes

The colours collection by SEED

Black lacquered powder coating with a fine texture 9005	White lacquered powder coating with a fine texture 9003	Grey lacquered powder coating with a fine texture 7016	Multi-RAL

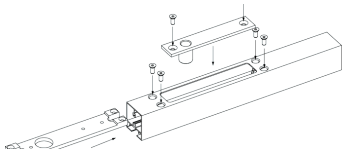

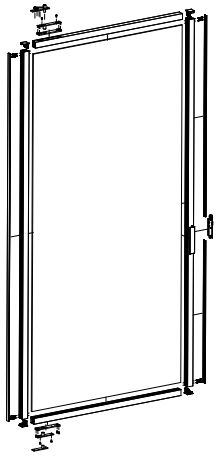

Offset pivot

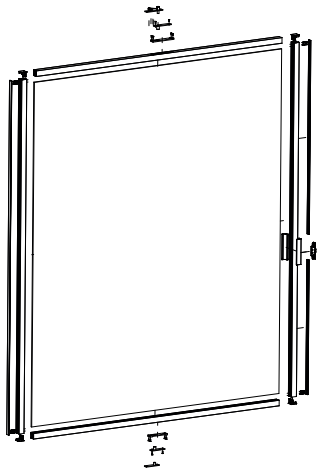

Centered pivot



DIMENSIONS

WIDTH
2080 mm (centred pivot)
1200 mm (offset pivot)

HAUTEUR
Up to 2500 mm

SUSPENDED SLIDING DOOR 40KG

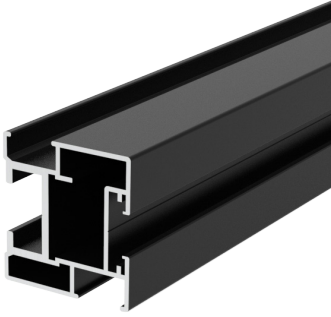

Ideal for compact spaces.

Suspended sliding doors are perfect for optimising space division, thanks to their wall- or ceiling-mounted system. A lightweight, easy-to-install **solution that's both practical and efficient.**



PRODUCT ADVANTAGES :

- Easy installation.
- Lateral plumb adjustment.
- Dual soft-close dampers for smooth opening and closing.
- Patented trolley - No. 0700534.
- Wall or ceiling mounting - top track adaptable using a bracket system.
- 6-8 mm infill: glass or decorative panel.
- Compatible with the SYMPHONEE interior glass partition V30 & V40.

Shades and finishes

The colours collection by SEED

Black lacquered powder coating with a fine texture 9005	White lacquered powder coating with a fine texture 9003	Grey lacquered powder coating with a fine texture 7016	Multi-RAL

Customisation

- Two handle profiles: 810 and 820.
- Integrated with the interior glass partition solution (V30 & V40 configuration).
- 25 mm adhesive flat profile can replace traditional crossbars to offer aesthetic flexibility.



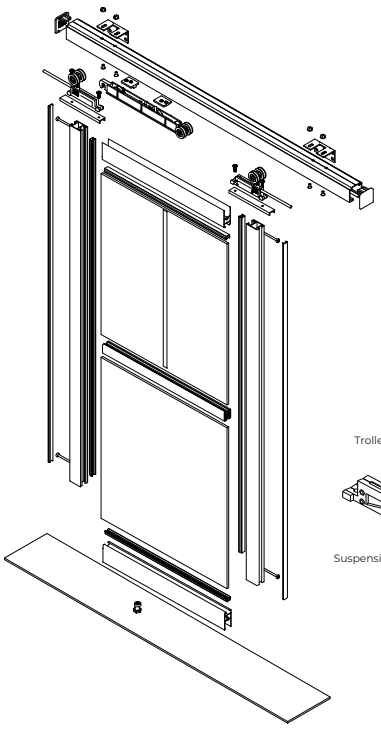

40 kg trolley

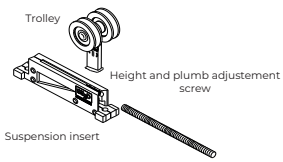

SUSPENDEND SLIDING DOOR 70KG

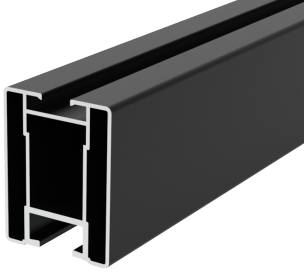

Ideal for compact spaces.

Suspended sliding doors are perfect for optimising space division, thanks to their wall- or ceiling-mounted system. A **soft-closing system** that provides a lightweight and easy-to-install solution.



PRODUCT ADVANTAGES:

- Open top track for wall-mounted installation.
- Driver guide to enable multi-panel configurations.
- Robust system supporting loads up to 70 kg.
- "All-Wood" configuration with dedicated wooden cover KIT.
- 6-8 mm infill: glass or decorative panel.
- Compatible with the SYMPHONEE interior glass partition V70.

Shades and finishes

The colours collection by SEED

- Black lacquered powder coating with a fine texture 9005
- White lacquered powder coating with a fine texture 9003
- Stainless steel
- Anodised silver
- Multi-RAL

Customisation

- Wood panel 30 to 40 mm thick.
- Three Handle Profiles: P810, P1000, and P7000.
- Option to integrate a recessed handle within the P7000 profile.



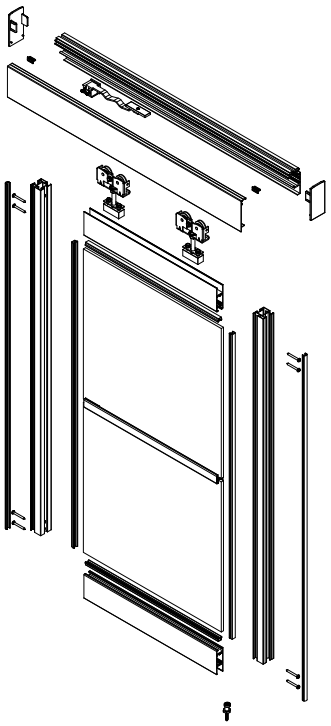



WOOD-COMPATIBLE VARIANT (70KG)

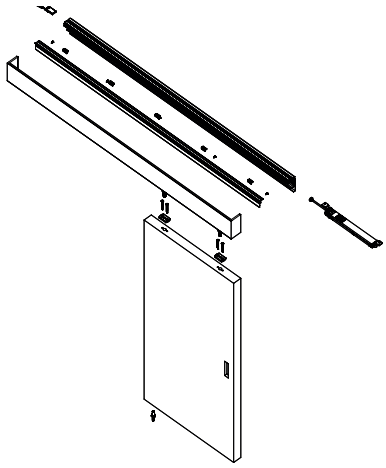

PRODUCT ADVANTAGES :

- Solid 100% Wood Door
- Top wooden panel cladded with clip-on decorative strip
- Concealed top track and mechanism
- Patented soft-close damper system
- Smooth, lightweight, and secure operation





INDUSTRIAL STYLE SUSPENDED SLIDING DOOR

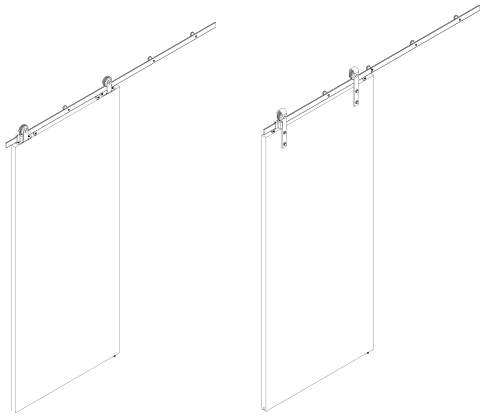

PRODUCT ADVANTAGES :

- Top-mounted rail and exposed bearings for a distinctive look.
- Compatible with panels 38-40 mm thick, supporting up to 100 kg.
- No floor-mounted rail
- Lateral or Top fixation



Lateral sliding support



Top fixation sliding support



COMPLEMENTARY SYSTEM - SYMPHONEE RANGE









SYMPHONEE
VERRIÈRES INTÉRIEURES

Our interior glass partition solutions integrate perfectly with the door system!

Z.A. des Estuaires,
Avenue de la Pierre Vallée,
50220 POILLEY

+33 (0)2 33 89 02 83

seedgammiste.com

Graphic design by SEED - brochure and illustrations are no-contractual - ©SEED - November 2026 edition